INDUMART Canada
www.indumart.com

Submersible Smart Level Transmitter

SERIES: LTS260

- 0.1% ACCURACY
- SELF-DIAGNOSIS MESSAGES
- HART® PROTOCOL COMMUNICATION
- LOCAL ZERO AND SPAN ADJUSTMENTS
- LONG-TERM STABILITY AND SERVICE LIFE
- AUTOMATIC TEMPERATURE COMPENSATION
- 4-20 mA OUTPUT & DIGITAL COMMUNICATION
- INTRINSICALLY SAFE AND EXPLOSION PROOF
- EXCELLENT ALTERNATING LOAD RESISTANCE
- 5-DIGIT & 4-DIGIT LCD'S INDICATORS WITH BACK LIGHT
- FULLY WELDED ELEMENTS WHICH GUARANTEES “NO LEAK”
- 3 YEARS ACCURACY STABILITY AND 5 YEARS LIMITED WARRANTY

WE'VE GOT HART FIELD COMMUNICATION PROTOCOL ABILITY

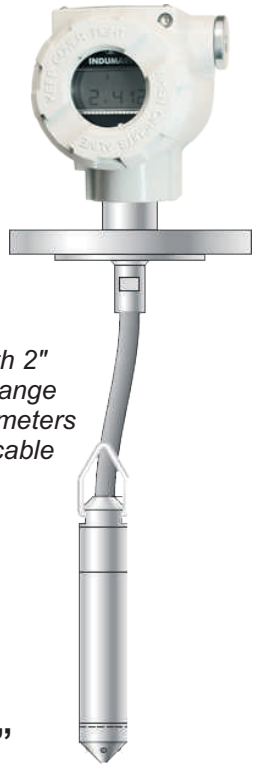

LTS260 with 2" Mounting Flange and up to 20 meters immersion cable

INTRODUCTION TO SMART TRANSMITTERS

Utilizing the smart technology in manufacturing of level transmitters resulted in introduction of a new transmitter with a lot more features than the old analogue model.

When deciding about purchasing analogue or smart transmitters for level systems, you will find that smart transmitters have higher accuracy and precision along with faster dynamic response than the analogue ones. This will give the smart models an advantage to produce tighter process control.

Moreover, smart transmitters reduce commissioning by allowing fast identification, fast configuration, fast loop tuning and improved self diagnostics. They can be configured and serviced in the field or from a remote location, such as the control room, along the 4-20 mA line. This ease of field service can be very important to quick field troubleshooting and improves maintenance issues.

Smart transmitters communicate through HART™ (Highway Addressable Remote Transducer) protocol, a platform ready for complete digital integration of your process system. The HART communication protocol is capable of performing simultaneous analogue and digital communications. HART protocol allows multi-drop instrument installation, operation over remote telephone communication lines and transmission of multiple variables when operating digitally.

SMART LTS260

Indumart *LTS260* Series of Smart Level Transmitters are two-wire microprocessor-based instruments, which can receive the static pressure of a liquid column and indicate the value of the hydrostatic pressure (liquid level) on its wide LCD display, and generate a 4-20 mA output signal directly or inversely proportional to the liquid level. Typical applications of the *LTS260* series is measurements of liquid level in open tanks and wells.

The *LTS260* Series utilize the proven piezoresistive silicon technology. The hydrostatic level probe works by converting changes in the resistance of the piezoresistive bridge, which is proportional to the pressure of a hydrostatic column of liquid, into a standard current output signal.

Special versions of the probes can be produced with cables shielded by an additional Teflon layer. The Teflon shield (in Ex version) is additionally equipped with stainless steel cord to dissipate the electrostatic charges. The probes are fitted with elements ensuring excess voltage protection. If the cable is to be exposed to current or turbulence, it should be installed in a separate protective tube, for example, one made from PVC.

These probes have features which enable many of their parameters to be set and altered. The configurable parameters affecting the probe’s output

signal include the following: unit of measurement, upper end-point and the lower end-point of the set range, damping time constant, type of characteristic curve (linear, square or square root).

It is possible to adjust the probe's zero point, for example to compensate for deviation resulting from a change in position of installation. When lowered to the reference level, the probe may either hang freely on the cable or lie down on the bottom of the tank.

Thermal drift is automatically compensated using the signal from a thermistor integrated into the level sensor. The high accuracy sensor coupled with the temperature compensation feature give a measurement precision, which is more than adequate for even the most demanding applications.

Due to the materials and technology used in the construction of these pressure transmitters, these instruments are excellent in reliability, resistance to corrosion against the majority of chemically aggressive media and withstanding mechanical shocks.

The electronic circuit boards are intrinsically safe for use in hazardous areas and the enclosure of the instrument is explosion proof type II 1/2 Exia/d IIC T5/T6 (customers must mention in their order whether the transmitter will be used in potentially explosive atmosphere).

Digital communication for remote calibration and monitoring is also provided, superimposing a digital signal on the same pair of wires that carries the 4-20 mA signal. These transmitters can be configured utilizing any of the three following methods: **(1)** locally configuring the instrument (zero, range, shift, characteristics and damping ratio) by means of pushbuttons on the transmitter, **(2)** by a PC with a dedicated interface and the Indumart smart configuration software (STS306); **(3)** with having the capability of digital communication, they may be configured using Indumart hand-held terminal with HART protocol or other hand-held communicators*.

The data interchange with the transmitter enables the user to identify the transmitter, calibrate the sensor, read the immediate measured value of the input and the current output of the transmitter. User may alter the measurement unit and the range, introduce zero elevation, apply measurement inversion, take a square root or squar the value of the measurement and set the damping time. Additionally the operator may force an output current with a set value.

** Some hanh-held communicators make transmitter configuration possible in the range of basic commands.*

HINTS TO THE BUYERS

1) The first question when purchasing a level transmitter is the **TYPE**: Smart or Analogue? Smart transmitters have remarkable advantages over the analogue ones. These features have been mentioned in the introduction part of this brochure. Cost comparison is also important, since the initial cost of a smart transmitters is higher than that of an analogue model, but in future, you will save less start-up, calibration, spare parts inventory and maintenance costs.

2) **ACCURACY** of the transmitter utilized in a process is often very important. Using piezoresistive silicon technology in *LTS260* results in a very high accuracy instrument which keeps its calibration for years in harsh conditions. The standard accuracy of the *LTS260* series is better than 0.1% of the calibrated range for ranges above 30% of the nominal range.

3) Wide **TURNDOWN RATIO** is an asset when you are concerned about keeping the number of spare transmitter in the stock. The *LTS260* series with wide rangeabilities will give the user a good flexibility for application of these transmitters and keeps the spare transmitters at its minimum. However, in order to receive the most accurate reading from any level transmitter available in the market, the user should choose the one with the closest nominal range to the application, and try not to use the turndown ratio in high extend. Increasing the turndown ratio decreases accuracy of the instrument.

4) Among the advantages of using **HART** protocol is the fact that different brands of smart transmitters can use the same hand-held terminal.

5) For those users who are reluctant to spend to purchase an Indumart HART communicator (HHC315 or HHC315X), they may order **series 306 programming software** separately to configure the *LTS260* transmitters. Cost of the *306 series* software is substantially lower than purchasing an Indumart HART communicator.

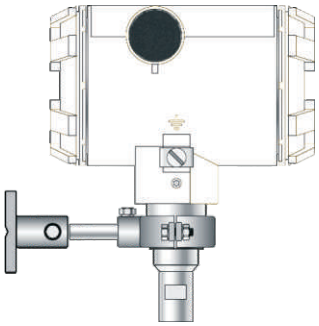

Mounting Bracket for LTS260

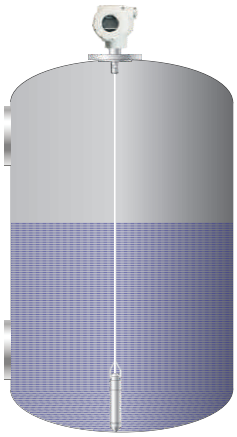

Application of LTS260 in a tank (not pressurized)

SPECIFICATIONS

Accuracy	Better than 0.1% of calibrated range (used between 30% and 100% of the nominal range)
Measuring Span	Up to 100% of the nominal span (See the Range Tables)
Accuracy Stability	Accuracy will be held for the nominal range for a minimum of 3 years
Output Signals	4...20 mA, 2-wire
Damping	Digitally adjustable from 0 to 60 sec.
Response Time	0.5 second
Thermal Drift	Effect of environmental temp. change <±0.1% (FS) /10°C; ±0.4% (FS) max. for the whole compensation range
Temp. Comp. Range	-25...80°C
Power Supply	12 to 28 VDC without backlit display. If not used in the explosive atmosphere, power supply can be 12 to 55 VDC. Add 3 Volts to the minimum voltage, when the backlit is ON
Maximum Load	R=(V-15*)/0.0236 * without the backlit (V-12*)/0.0236
Power Supply Effect	0.002% FS / V
Intrinsically Safe	II 1/2 Ex ia IIC T4/T5
Explosion-proof	II 1/2 G Exia/d IIC T5/T6; for range "D" II 1/2 D Exia/D 20/tD A21 T85/T100 for ranges "F" and "G"
Housing IP Rating	IP67
Indicator	2 LCD's and a 10-segment bargraph with bright back light; large display: 5-digit, 7.5 mm high small display: 4-digit, 5 mm high
Process Connection	Free fall (std.); 2" Flange #150 (option) see the order code
Wetted Parts	316L SS
Wetted Part Standard	NACE MR - 01 - 75 compatible
Housing Material	Aluminum alloy with polyurethane paint Stainless steel housing (option)
Conduit Entry Size	½" NPTF (std.); M20x1.5 conduit (option)
Fill Liquid	Silicon
Medium Temp.	non-freezing -25...+120°C; for explosive environment according to the Ex and Intrinsically safe specification
Storage & Ambient	-25...+85°C; Exi version up to 80°C Exd version up to 75°C
EMC Immunity	EN 61000-4-3: 2007 + A1:2008

Measuring Ranges for Series LTS260 Level Transmitters

Range	Nominal Range	Min. Set Range	Rangeability	Over pressure Limit
D	0~2.5 mH2O	0.5 mH2O	5:1	25 mH2O
F	0...10 mH2O	1.0 mH2O	10:1	100 mH2O
G	0...20 mH2O	2 mH2O	10:1	200 mH2O

1 mH2O = 39.37 in. H2O = 0.09807 bar = 9.8066 kPa = 1.42233 psi

DIMENSIONS (mm)

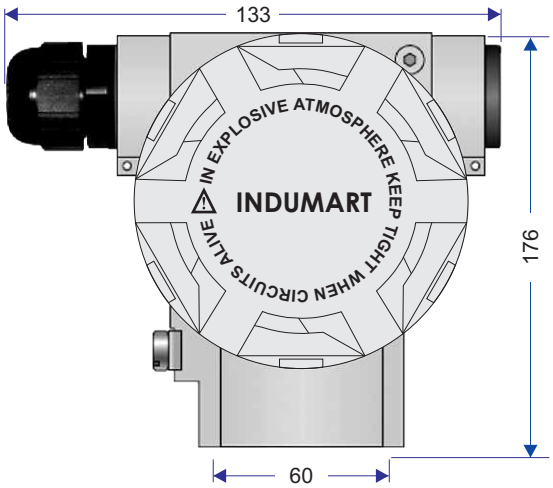

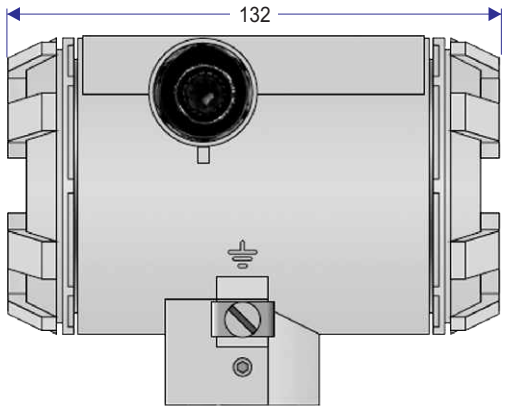

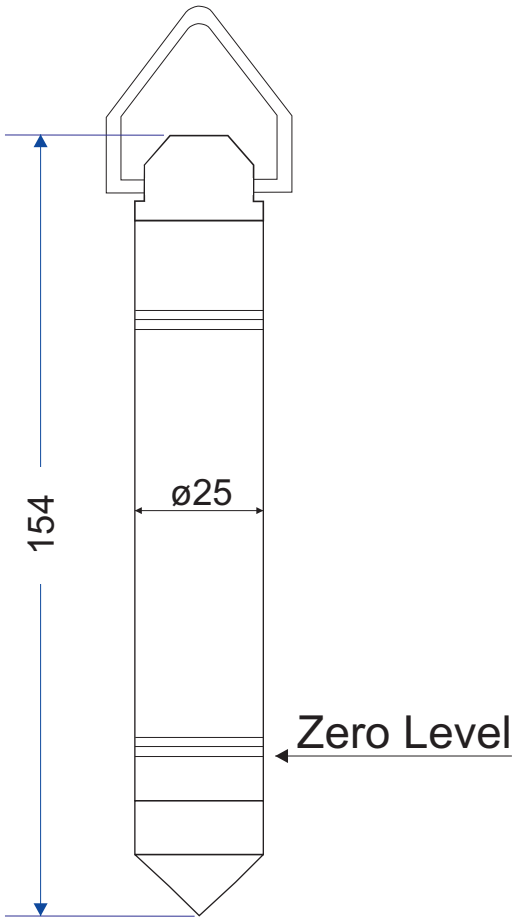

ORDER CODE

SMART SUBMERSIBLE LEVEL TRANSMITTERS

Model: **LTS260 – ☐ ☐ ☐ ☐ ☐ ☐ ☐ ☐**

NOMINAL RANGE
0~2.5 mH2O (0.5 mH2O minimum) — D
0...10 mH2O (1 mH2O minimum) — F
0...20 mH2O (2 mH2O minimum) — G

CABLE LENGTH
Please specify in meters — ☐

ELECTRICAL ENCLOSURE
Aluminum with polyurethane paint (std.) — 0
Stainless Steel (option) — S

MOUNTING THE ENCLOSURE
Wall mounting Bracket as shown on the page 2 Figure (std.) — 0
2" Flange #150 — 1
Other (please mention the flange or the thread) — X

ELECTRICAL CONDUIT ENTRY SIZE
1/2" NPTF (std) — 0
M20x1.5 (packing gland) — 1

CABLE SHIELDING
Polyurethane (std.) — 0
Teflon (option) — 1

CERTIFICATE
None — 0
Intrinsically safe (EEX ia IIC T5) — 1
Explosion proof for the enclosure (EEX d ia IIC T5) — 2
Marine certificate for the enclosure- DNV — 3

CALIBRATED RANGE
Same as the nominal Range (std) — 0
Other - please specify the range — X

Application Question

Can the operator set the transmitter to have an output proportional to the height of the liquid in the tank but the indicator showing the filling capacity or the amount of the liquid in a tank with a constant cross section?

The answer to the above question is YES. By using the STS306 software, the user can set the output (mA) of the transmitter to be proportional to the height of the liquid in the tank, while reranging the display to indicate the remaining capacity of a tank or to indicate the amount of liquid in the tank. This is a very useful feature, used for vessels with a constant cross section and can help the operators with filling the vessels.

Also Available

INDUMART INC.
1-15 W. Pearce St., Richmond Hill, Ont. L4B 1H6, Canada
Phone: (905) 707-9998 Fax: (905) 707-8484 E-mail: Sales@Indumart.com